POCAHONTAS COUNTY COMMISSION

John Rebinski, President

Jamie Walker, Commissioner | Thane Ryder, Commissioner

900 Tenth Avenue Marlinton, West Virginia 24954
Telephone: (304)799-6063
Join Zoom Meeting [illegible]
Meeting ID: 818 136 1801
By phone: 1-929-205-6099 US (New York) 1-301-715-8592 US (Washington DC)
Find your local number: [illegible]

August 5, 2025
Regular Session

8:30 a.m. Discussion and/or Action – Exoneration/Apportioned Orders; Approval of Minutes
8:35 a.m. Public Input/Hear Callers
8:45 a.m. Discussion and/or Action – Opening and Awarding of Bids for Update of Video Surveillance System for the Pocahontas County Courthouse
9:00 a.m. Discussion and/or Action – Amanda Smarr, Region 4 – Draw Request #16 for the Pocahontas County ARC Broadband Project
9:15 a.m. Discussion and/or Action – Donna Ward, Region 4 – Resolution #11 for the PMH/HVAC Project
9:30 a.m. Discussion and/or Action – EMS Authority – Further discussion on EMS Director
10:00 a.m. Discussion and/or Action – Contribution/Funding Requests Various Individuals, Groups and Organizations
a. Angie Pase - Tucker Community Foundation Run for It 2025
b. Tim Walker – Stivens Battery, Droop Battlefield Reenactment
12:00 p.m. Lunch Break

OTHER AGENDA ITEMS
(The Following Agenda Items Will Be Discussed During Meeting but Have Not Been Allotted a Time)

1. Approve Final Settlements and Orders
2. County Commission Mail Items/Concerns
3. Discussion and/or Action – Bridget Shaw – Clarification of responsibilities as Interim Director of 911/OES
4. Discussion and/or Action – Resolution #11 for EPA Tannery Project
5. Discussion and/or Action – Rescheduling County Commission meeting for August 19, 2025 due to conflict with Election Conference
6. Discussion and/or Action – Approval of Electronic Signature for participation in the new National Opioids Settlement
7. Discussion and/or Action – Jodi Dickefoose, Day Report Director - Approval of Agreement and Resolution for Community Corrections Program Grant 2025-2026
8. Discussion and/or Action – Memorandum of Understanding between Pocahontas County Commission and REMS (Rapid Extraction Module Support)
9. Discussion and/or Action – County Commission's Authority over Appointed Boards and Departments directly under their supervision
10. Discussion and/or Action – Approval of MOU for 911 Tower Beard Height Tower with Pocahontas County Board of Education
11. Discussion and/or Action – Approval of Energy Efficiency & Conservation Block Grant
12. Discussion and/or Action – Approval to use Opioid Funds for Pocahontas Ambulance Equipment
13. Approve Invoices

At a Regular Session of the Pocahontas County Commission held at the Courthouse situate in Marlinton, West Virginia, on the 5th day of August, 2025.

PRESENT: John Rebinski, President
Jamie Walker, Commissioner
Thane Ryder, Commissioner

Prior to the beginning of today's session, the Commission invited all individuals in attendance to stand and recite the Pledge of Allegiance.

IN RE: EXONERATION ORDERS APPROVED

None

IN RE: MINUTES APPROVED

A motion was made by Commissioner Walker to approve the minutes of the last regular session of the Commission held on the 15th day of July, 2025, as presented, and noting no objections, motion carried.

IN RE: FINAL SETTLEMENTS AND ORDERS APPROVED

Commission President John Rebinski reviewed several final settlements and orders pertaining to estates as presented by the County Clerk's Office and, thereafter, approved same by placing his signature thereto.

IN RE: COUNTY COMMISSION MAIL ITEMS/CONCERNS

1. Copy – Letter of Retirement for Kenneth D. Schoolcraft
2. Copy – WV Department of Health EMS Service equipment fund awarded $90,909.09

IN RE: SIGN IN SHEET/HEAR CALLERS

None

IN RE: CLARIFICATION OF RESPONSIBILITIES AS INTERIM DIRECTOR OF 911/OES

Bridget Shaw met with the Commission for clarification of responsibilities as interim director of 911/OEM. Comments were made by the Commission. No Action was taken on this matter.

IN RE: OPENING AND AWARDING OF BIDS FOR UPDATE OF VIDEO SURVEILLANCE SYSTEM FOR THE POCAHONTAS COUNTY COURTHOUSE

The Commission opened the only bid received from Securitech LLC, for $19,134.10 to include equipment, installation, and hardware. A motion was made by Commissioner Walker to approve Securitech LLC bid for the update of video surveillance system for the Pocahontas County Courthouse, and noting no objections, motion carried.

SecuriTech, LLC
Fire · Security · Video · Access Control

613 Smith Street Addition
Marlinton, West Virginia 24954
Phone/Fax: (304) 799-7235
Mobile: (304) 651-7233
Email: joe@securitechllc.com
WV Contractor #041612 | NICET #117096

Optiview IP Digital Video Surveillance System for the Pocahontas County Courthouse

Date: 08/01/2025

Valid through: 08/31/2025

SecuriTech, LLC is a full-service life safety installer with over 25 years of expenence, specializing in fire and security alarm, video surveillance and access control systems. We are located in Marlinton, West Virginia and support commercial and residential clients in Pocahontas, Randolph and Greenbrier Counties.

We have successfully installed and maintained video surveillance systems & access controls in small businesses, hotels and multi-tenant condominiums, and large commercial buildings.

In this proposal, you'll find a summary of your video surveillance system needs based on previous conversations, our proposed videocsolution, and associated costs and installation schedules.

This proposal is valid until August 31, 2025. Should you need to extend your decision past that date, we'll be happy to revisit this document to ensure all pricing and installation schedules are accurate at the time of signing.

Thank you for the opportunity to submit this proposal. Feel free to contact us with any questions.

Respectfully submitted,

Joe Clendenen
SecuriTech, LLC
(304) 651-7233

SecuriTech, LLC
Fire · Security · Video · Access Control

613 Smith Street Addition
Marlinton, West Virginia 24954
Phone/Fax: (304) 799-7235
Mobile: (304) 651-7233
Email: joe@securitechllc.com
WV Contractor #041612 | N-CET #117096

Project Outline

Optiview IP digital video surveillance system for the Pocahontas County Courthouse consisting of:

(1) 32 channel 4K network video recorder (NVR) with 24TB of hard drive storage
(1) 24 port POE network switch
(24) 8-mega-pixel varifocal color armor dome IP cameras

The (15) existing analog cameras will be replaced with the new Optiview cameras

(9) additional cameras will be added at the following locations

- courthouse outside main entry
- outside at handicap entry door
- outside corner of the building facing the 911 Center
- outside at alley entry door
- outside Health Department entry door
- outside at the front stairwell exit door
- outside main floor hallway exit door next to Sheriff's Office
- main floor exit stairwell next to elevator
- 2nd floor exit stairwell backside of court room

All existing coax cabling connecting the current analog cameras will be replaced with Cat6 network cabling.

Optiview monitoring software & smart phone applications will be installed on customer-provided computers & smart phones.

SecuriTech, LLC is within a 10-minute drive for service calls to Pocahontas County Courthouse.

SecuriTech, LLC
Fire · Security · Video · Access Control

613 Smith Street Addition
Marlinton, West Virginia 24954
Phone/Fax: (304) 799-7235
Mobile: (304) 651-7233
Email: joe@securitechllc.com
WV Contractor #041612 | NICET #117096

Training & Warranty

SecuriTech, LLC will provide end-user training on operation of the system.

The equipment warranty will be limited to manufacturers' specifications.

SecuriTech LLC will provide a one-year warranty on the installation of equipment from the installation date. All Optiview equipment will have a 24-month manufacturer's warranty.

Pricing

The total estimated cost of this project will be $19,134.10, to include equipment, installation and hardware.

Acceptance

Please sign and date this proposal to indicate your acceptance of the hardware, pricing and installation indicated above. This is not a legally binding contract. Once this signed proposal is received, SecuriTech, LLC will draft a contract for signature by both parties.

_____

_____
Date

Spec Sheet: IP8MIAD-212AI-NCV

8MP Armor Dome Varifocal Camera w/ Analytics & Built-in Mic

Product Specifications Cont.

ILLUMINATOR	
IR Range	[illegible]
Wavelength	[illegible]
IR On / Off Control	[illegible]

VIDEO	
Video Compression	[illegible]
H.264 Code Profile	[illegible]
Frame Rate	[illegible]
Video Bit Rate	[illegible]
U-code	[illegible]
OSD	[illegible]
Privacy Mask	[illegible]
ROI	[illegible]
Video Stream	[illegible]

IMAGE	
White Balance	[illegible]
Digital Noise Reduction	[illegible]
Smart IR	[illegible]
Flip	[illegible]
Dewarping	[illegible]
HLC	[illegible]
BLC	[illegible]
Defog	[illegible]

INTELLIGENT	
Smart Intrusion Prevention	[illegible]
Statistical Analysis	[illegible]

EVENTS	
Basic Detection	[illegible]
General Function	[illegible]

AUDIO	
Audio Compression	[illegible]
Audio Bitrate	[illegible]
Two-way audio	[illegible]
Suppression	[illegible]
Sampling Rate	[illegible]

STORAGE	
Edge Storage	[illegible]
Network Storage	[illegible]

NETWORK	
Protocols	[illegible]
Compatible Integration	[illegible]
User/Host	[illegible]
Security	[illegible]
Client	[illegible]
Web Browser	[illegible]

INTERFACE	
Audio I/O	[illegible]

Spec Sheet: IP8MIAD-212AI-NCV

8MP Armor Dome Varifocal Camera w/ Analytics & Built-in Mic

Dimensions

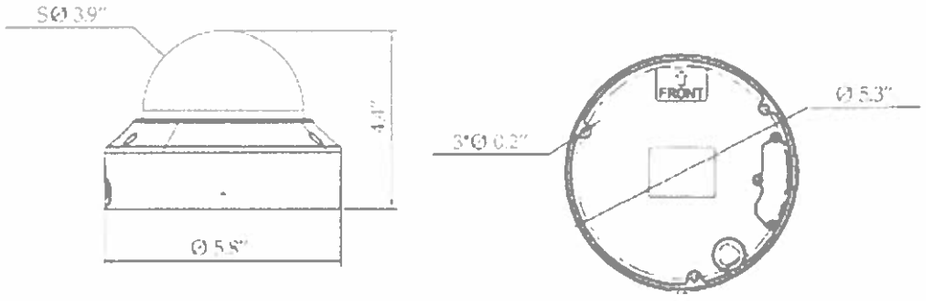

CONTRACTOR LICENSE

AUTHORIZED BY THE

West Virginia Contractor Licensing Board

NUMBER: WV041612

CLASSIFICATION:

SPECIALTY
COMMUNICATION & SOUND
LOW VOLTAGE SYSTEMS <80 VOLTS

SECURITECH LLC
DBA AXIOM SOLUTIONS
613 SMITH STREET
MARLINTON, WV 24954-1484

DATE ISSUED	EXPIRATION DATE
OCTOBER 17, 2024	OCTOBER 17, 2025

Authorized Signature

Chair, West Virginia Contractor Licensing Board

WEST VIRGINIA CONTRACTOR LICENSING BOARD

A copy of this license must be readily available for inspection by the Board on every job site where contracting work is being performed. This license number must appear in all advertisements, on all bid submissions, and on all fully executed and binding contracts. This license is non-transferable. This license is being issued under the provisions of West Virginia Code, Chapter 30, Article 42.

SCOTTSDALE INSURANCE COMPANY®

COMMERCIAL GENERAL LIABILITY COVERAGE PART
SUPPLEMENTAL DECLARATIONS

Policy No. CPS8182360 Effective Date 06/15/2025
12:01 A.M., Standard Time

Named Insured SECURITECH, LLC Agent No 16002

Item 1. Limits of Insurance		
Coverage	Limit of Liability	
Aggregate Limits of Liability	$ 2,000,000	Products/Completed Operations Aggregate
	$ 2,000,000	General Aggregate (other than Products/Completed Operations)
Coverage A—Bodily Injury and Property Damage Liability	$ 1,000,000	any one occurrence subject to the Products/Completed Operations and General Aggregate Limits of Liability
Damage to Premises Rented to You Limit	$ 100,000	any one premises subject to the Coverage A occurrence and the General Aggregate Limits of Liability
Coverage B—Personal and Advertising Injury Liability	$ 1,000,000	any one person or organization subject to the General Aggregate Limits of Liability
Coverage C—Medical Payments		any one person subject to the Coverage A occurrence and the General Aggregate Limits $ 5,000

Item 2. Description of Business

Form of Business:

☐ Individual ☐ Partnership ☐ Joint Venture ☐ Trust ☑ Limited Liability Company

☐ Organization including a corporation (other than Partnership, Joint Venture or Limited Liability Company)

Location of All Premises You Own, Rent or Occupy:
SEE SCHEDULE OF LOCATIONS

Item 3. Forms and Endorsements

Form(s) and Endorsement(s) made a part of this policy at time of issue:
See Schedule of Forms and Endorsements

Item 4. Premiums

Coverage Part Premium	$	$1,207
Other Premium:	$	
Total Premium:	$	$1,207

THESE DECLARATIONS ARE PART OF THE POLICY DECLARATIONS CONTAINING THE NAME OF THE INSURED AND THE POLICY PERIOD

CG 50 11 04 13

IN RE: RESOLUTION #11 FOR EPA TANNERY PROJECT

A motion was made by Commissioner Walker to approve Resolution #11 for the EPA Tannery Project for $2,740.00, and noting no objections, motion carried.

Pocahontas County Commission

JOHN REBINSKI
President
JAMIE WALKER
Commissioner
THANE RYDER
Commissioner

PCC/EPA
Resolution # 11

RESOLUTION OF THE POCAHONTAS COUNTY COMMISSION APPROVING INVOICES RELATING TO ACTIVITIES PERFORMED UNDER THE EPA COOPERATIVE AGREEMENT #95317501

Whereas, the Pocahontas County Commission has reviewed the invoices attached hereto and incorporated herein by reference relating to the activities performed under Cooperative Agreement #95317501 funded by the US Environmental Protection Agency and finds as follows:

a) That none of the items for which the payment is proposed to be made has formed the basis for any disbursement heretofore made.
b) That each item for which the payment is proposed to be paid is or was necessary in connection with the project and constitutes a cost of the project.
c) That each of such costs has been otherwise properly incurred.
d) That payment for each of the items proposed is due and owing as the date hereof.

Whereas, the Pocahontas County Commission will draw down funds through ASAP into the project bank account all will apply said proceeds to eligible invoices received.

Now, Therefore, be it resolved by the Pocahontas County Commission, it hereby authorizes and directs the payment of the attached invoices as follows:

Vendor	Total Invoice Amount	EPA Grant
Greenbrier Environmental Group	$2,740.00	$2,740.00
Total	$2,740.00	$2,740.00

Adopted by the Pocahontas County Commission, on the 5th day of August 2025

By _____
John Rebinski
President Pocahontas County Commission

900 Tenth Avenue * Marlinton, WV 24954 * (304)799 6063

Greenbrier Environmental Group, Inc.
292 Oak Carriage Drive
Lewisburg, West Virginia 24901
Office (304) 520-4260
Fax (304) 520-4265
www.greenbrierenv.com

Invoice

Bill To:
Pocahontas County Commission
900 Tenth Avenue
Marlinton, WV 24954

Invoice #: 2025-1633
Invoice Date: 7/23/2025
Due Date: 8/22/2025
Project: PCC-2024-142
Terms: Net 30
Billing Period: June 2025

Service Date	Description	Hours/Qty	Rate	Amount
	Site Assessment Work Plan Former Howes Tannery 165 Industrial Park Road Frank, Pocahontas County, West Virginia			
6/2/2025	Senior Consultant II Project development including finalizing SAWP/Groundwater Deviation Request	1	145.00	145.00
6/3/2025	Senior Consultant II - Reviewing public water intake information related to springs/finalizing deviation request for internal review	2.5	145.00	362.50
6/4/2025	Senior Consultant II - SAWP review/development, Finalizing Deviation Request for internal review	4.5	145.00	652.50
6/4/2025	Staff Scientist - Revisions to SAWP	4	80.00	320.00
6/5/2025	Staff Scientist - Revisions to of SAWP	5.5	80.00	440.00
6/9/2025	Senior Consultant II - SAWP review/development	1	145.00	145.00
6/12/2025	Senior Consultant II - Final review of SAWP	0.5	145.00	72.50
6/16/2025	Staff Scientist - Revisions to SAWP	3	80.00	240.00
6/20/2025	Senior Consultant II - Finalizing SAWP for client review	1	145.00	145.00
6/23/2025	Senior Consultant II - Finalizing SAWP for client review/signature	0.5	145.00	72.50
6/26/2025	Senior Consultant II - Project development with EPA	1	145.00	145.00

Thank you for your business.

Total	$2,740.00
Payments/Credits	$0.00
Balance Due	$2,740.00

IN RE: AMANDA SMARR, REGION 4 – DRAW REQUEST #16 FOR THE POCAHONTAS COUNTY ARC BROADBAND PROJECT

Amanda Smarr with Region 4 met with the Commission to ask for approval of Resolution #16 for the Broadband Project for $2,012.49. A motion was made by Commissioner Walker to approve Resolution #16, and noting no objections, motion carried.

Pocahontas County Commission

JOHN REBINSKI
President
JAMIE WALKER
Commissioner
THANE RYDER
Commissioner

P-PCC-003
Resolution #16
August 5th, 2025

RESOLUTION OF THE Pocahontas County Commission APPROVING
INVOICES
RELATING TO THE POCAHONTAS COUNTY BROADBAND PROJECT AND AUTHORIZING PAYMENT
THEREOF

WHEREAS, the Pocahontas County Commission has reviewed the invoices attached hereto and incorporated herein by reference relating to the Pocahontas County Broadband Project to be financed by the Appalachian Regional Commission (ARC) as follows

a) That none of the items for which the payment is proposed to be made has formed the basis for any disbursement theretofore made;
b) That each item for which the payment is proposed to be made is or was necessary in connection with the Project and constitutes a Cost of the Project;
c) That each of such costs has been otherwise properly incurred, and
d) That payment for each of the items proposed is now due and owing.

NOW, THEREFORE, BE IT RESOLVED by the Pocahontas County Commission the President Walt Helmick is hereby authorized to request payment of said invoices as follows:

Vendor	Invoice #	Total	ARC
Frontier Communications	WVFLV38730525	$253.00	$253.00
Region 4 Planning and Development Council	5312025	$1,120.05	$1,120.05
Region 4 Planning and Development Council	6302025	$430.71	$430.71
Region 4 Planning and Development Council	25 434400	$89.13	$89.13
Region 4 Planning and Development Council	266734	$119.60	$119.60
Total		$2,012.49	$2,012.49

ADOPTED BY THE Pocahontas County Commission on the 5th day of August 2025.

Pocahontas County Commission
By: _____
John Rebinski, President

Pocahontas County Commission
By: _____
Jamie Walker, Commissioner

Pocahontas County Commission
By: _____
Thane Ryder, Commissioner

900 Tenth Avenue * Marlinton, WV 24954 * (304)799-6063

WV ARC RSBA

REQUEST FOR ADVANCE OR REIMBURSEMENT

(See instructions on back)

OMB APPROVAL NO

1. TYPE OF PAYMENT REQUESTED — a. "X" one or both items: ☐ ADVANCE ☑ REIMBURSEMENT; b. "X" one applicable box: ☐ FINAL ☐ PARTIAL

2. BASIS OF REQUEST: ☑ CASH ☐ ACCRUAL

3. FEDERAL SPONSORING AGENCY AND ORGANIZATION ELEMENT TO WHICH THIS REPORT IS SUBMITTED: ARC

4. FEDERAL GRANT OR OTHER IDENTIFYING NUMBER ASSIGNED BY FEDERAL AGENCY: PW-20438-IM-2021

5. PARTIAL PAYMENT REQUEST NUMBER FOR THIS REQUEST: 16

6. EMPLOYER IDENTIFICATION NUMBER

7. RECIPIENT'S ACCOUNT NUMBER OR IDENTIFYING NUMBER

8. PERIOD COVERED BY THIS REQUEST — FROM (month, day, year): 04/14/25 — TO (month, day, year): 07/09/25

9. RECIPIENT ORGANIZATION

Name: Pocahontas County Commission

Number and Street: 900 Tenth Avenue

City, State and ZIP Code: Marlinton, WV 24954

10. PAYEE (Where check is to be sent if different than item 9)

Name:

Number and Street:

City, State and ZIP Code:

11. COMPUTATION OF AMOUNT OF REIMBURSEMENTS/ADVANCES REQUESTED

PROGRAMS/FUNCTIONS/ACTIVITIES ▶		(a) Administration Construction	(b)	(c)	TOTAL
a. Total program outlays to date (As of date: 08/05/25)		$893,875.37	$0.00	$0.00	$893,875.37
b. Less: Cumulative program income		$0.00	$0.00	$0.00	
c. Net program outlays (Line a minus line b)		$893,875.37			$893,875.37
d. Estimated net cash outlays for advance period		$0.00	$0.00	$0.00	
e. Total (Sum of lines c & d)		$893,875.37			$893,875.37
f. Non-ARC share of amount on line e		$0.00			
g. ARC share of amount on line e		$893,875.37	$0.00	$0.00	$893,875.37
h. ARC payments previously requested		$891,862.88	$0.00	$0.00	$891,862.88
i. ARC share now requested (Line g minus line h)		$2,012.49			$2,012.49
j. Advances required by month, when requested by Federal grantor agency for use in making prescheduled advances	1st month				
	2nd month				
	3rd month				

12. ALTERNATE COMPUTATION FOR ADVANCES ONLY

a. Estimated Federal cash outlays that will be made during period covered by the advance	
b. Less: Estimated balance of Federal cash on hand as of beginning of advance period	
c. Amount requested (Line a minus line b)	

AUTHORIZED FOR LOCAL REPRODUCTION (Continued on Reverse)

STANDARD FORM 270 (Rev. 2-92)
Prescribed by Office of Management and Budget
Cir. No. A-102 and A-110

ARC PERFORMANCE PROGRESS REPORT

Page	of Pages

1. Federal Agency and Organization Element to Which Report is Submitted	2. ARC Grant Number	3a. DUNS Number / 3b. EIN
Appalachian Regional Commission	PW-20438-IM-2021	3a. DUNS Number 117769062 3b. EIN 55-0574804

4. Recipient Organization (Name and complete address including zip code)	5. Recipient's Identifying Number or Account Number
Pocahontas County Commission 900 Tenth Avenue Marlinton, WV 24954	P-PCC-003

6. Project/Grant Period		7. Reporting Period Dates	8. Final Report?	9. Report Frequency
Start Date: *(Month, Day, Year)*	End Date: *(Month, Day, Year)*	*(Month, Day, Year)*	☐ Yes ☒ No	☐ annual ☐ semi-annual ☐ 120-day ☑ other (If other, describe _____)
10/01/21	09/30/25	04/14/25-07/09/25		

10. Performance Narrative *(attach as separate file per instructions found in Section IX-Grant Administration Manual)*

Please see attached

11. Other Attachments *(attach other documents as needed or as instructed by the ARC project coordinator)*

12. Certification: I certify to the best of my knowledge and belief that this report is correct and complete for performance of activities for the purposes set forth in the award documents.

12a. Typed or Printed Name and Title of Authorized Certifying Official	12c. Telephone *(area code, number and extension)*
John Robinski Pocahontas County Commission President	1 (304) 799-6063
	12d. Email Address: pocaclk@clerk.state.wv.us
12b. Signature of Authorized Certifying Official	12e. Date Report Submitted *(Month, Day, Year)*: 08/5/25

Performance Report
"Pocahontas County Broadband Project"

Background:

The Pocahontas County Broadband Project will provide approximately 49 miles of aerial fiber to service to 24 businesses and 1,011 households in the Proposed Funded Service Area (PFSA) stretching from Marlinton east to Minnehaha Springs and north to Dunmore. The majority of the PFSA is in Pocahontas County's federally mandated National Radio Quiet Zone (NRQZ), where the use of any electrical equipment (including permanent, fixed, wireless licensed transmitter services) that causes interference to Radio Astronomical Observation is prohibited within a ten-mile radius of the Green Bank Observatory. Due to the inability to use fixed wireless for last mile service in this rural, sparsely populated area, residents and businesses in the PFSA will never have access to broadband without federal assistance. With $2.5 million in ARC POWER funds matched with $1,083,000 in ISP investment, Pocahontas County Commission will deploy a fiber-to-the-premises (FTTP) network solution that will provide gigabit-speed broadband service, next generation IPTV video television services, and quality voice services to the rural households, farms, businesses, critical care facilities, and educational facilities located in the PFSA. Providing access to highspeed broadband services to residents, businesses, and institutions in the PFSA will help Pocahontas County to advance economic recovery from coal decline and COVID-19 by supporting small businesses, spurring tourism development, expanding telemedicine access, and establishing remote work capabilities. The newly formed Pocahontas Broadband Council will conduct educational outreach to increase adoption and maximize economic benefit of the fiber deployment.

Recent/Upcoming Activities:

The Grant Agreement for this project was received and executed in September 2020. Thompson & Litton, Inc was properly procured and selected as the project Consultant. Region 4 Planning and Development Council will provide project administration.

Internet Service Provider Citynet has been procured as the Service Provider for the project.

Consultant Thompson & Litton is working with Citynet on the project design.

A Time Extension was requested and approved amending the Period of Performance to 10/01/21-09/30/25.

A drawdown request in the amount of $253.00 is being made to reimburse Frontier Communications for Make Ready work completed during the time period of 05/08/25-07/09/2025. A drawdown request in the amount $1,759.49 is being made to reimburse Region 4 Planning and Development Council for Administrative work completed during the time period 04/14/25-06/22/25.

Progress Made Toward Project Outcomes:

The primary areas of progress made toward project outcomes during this reporting period include:

a) Executing the ARC Grant Agreement;

b) Procuring administrative services and a Project Consultant;

c) Procuring Internet Service Provider

d) Environmental Review Process Completed

e) Notice to Proceed with Exempt Activities has been received

f) Authorization to Bid has been Received

g) Bid Opening was held on July 8th, 2025

h) Pocahontas County Commission selected Quanta Telecom Services

Problems Encountered:

No issues have been encountered to date.

Outlook for Program Continuation and Sustainability:

In the upcoming reporting period, the project expects to prepare to go to Construction.

IN RE: RESCHEDULING COUNTY COMMISSION MEETING FOR AUGUST 19, 2025 DUE TO CONFLICT WITH ELECTION CONFERENCE

A motion was made by Commissioner Walker to reschedule the County Commission meeting for August 19, 2025 due to conflict with Election Conference to Thursday August 21, 2025 at 5:30 P.M., and noting no objections, motion carried.

IN RE: JODI ZICKEFOOSE, DAY REPORT DIRECTOR - APPROVAL OF AGREEMENT AND RESOLUTION FOR COMMUNITY CORRECTIONS PROGRAM GRANT 2025-2026

A motion was made by Commissioner Walker to approve the Agreement and Resolution for the Community Corrections Program Grant 2025-2026, and noting no objections, motion carried.

RESOLUTION

The Commission of Pocahontas County met on March 18, 2025, with a quorum present and passed the following resolution

Be it resolved that the Pocahontas County Commission hereby authorizes John Rebinski, President of the Pocahontas County Commission, to act on its behalf to enter into a contractual agreement with the Division of Administrative Services, Justice and Community Services section to receive and administer grant funds pursuant to provisions of the Pocahontas County Community Corrections Grant Program.

John Rebinski, Commissioner

Jamie Walker, Commissioner

Thane Ryder, Commissioner

IN WITNESS WHEREOF, I hereunto set my hand and affix the seal of the Corporation this 18th day of March 2025.

Melissa L. Bennett, County Clerk

IN RE: APPROVAL OF ELECTRONIC SIGNATURE FOR PARTICIPATION IN THE NEW NATIONAL OPIOIDS SETTLEMENT

A motion was made by Commissioner Walker for the approval of Electronic Signature for participation in the New National Opioids Settlement, and noting no objections, motion carried.

Docusign Envelope ID: 32F84622-895A-4083-B7D6-FF7B80FB9CC5

New National Opioids Settlement: Purdue
Opioids Implementation Administrator
opioidsparticipation@ubecs.com

Pocahontas County, WV
Reference Number: CL-1759871

TO LOCAL POLITICAL SUBDIVISIONS:

THIS PACKAGE CONTAINS DOCUMENTATION TO PARTICIPATE IN THE NEW NATIONAL OPIOIDS SETTLEMENT. YOU MUST TAKE ACTION IN ORDER TO PARTICIPATE.

Deadline: September 30, 2025

A new proposed national opioids settlement has been reached with Purdue (and certain of its affiliates) and the Sackler family. This *Participation Package* is a follow-up communication to the *Notice of New National Opioids Settlement* recently received electronically by your subdivision.

The proposed settlement is being implemented in connection with Purdue's bankruptcy proceedings, and consists of, among other things, a settlement of Purdue's claims against the Sacklers and certain other parties (referred to as the "Purdue Estate Settlement"), and settlements of direct claims against the Sacklers held by States, local governments and other creditors (collectively, the "Purdue Direct Settlement", and together with the Estate Settlement, the "Purdue Settlement"). The Purdue Direct Settlement for States and local governments is documented in the Governmental Entity and Shareholder Direct Settlement Agreement.

You are receiving this *Participation Package* because all eligible States and territories, including West Virginia, are participating in the Purdue Direct Settlement.

This electronic envelope contains:

- The *Participation Form* for the Purdue Direct Settlement, including a release of any claims

The *Participation Form* must be executed, without alteration, and submitted on or before September 30, 2025, in order for your subdivision to be considered for initial participation calculations and payment eligibility under the Purdue Direct Settlement.

Based upon subdivision participation forms received on or before September 30, 2025, the subdivision participation rate will be used to determine whether participation is sufficient for the Purdue Settlement to move forward and whether a state earns its maximum potential payment under the Purdue Direct Settlement. If the Purdue Settlement moves forward and goes effective, your release will become

effective. If the Purdue Settlement does not move forward, that release will not become effective.

Any subdivision that does not participate in the Purdue Direct Settlement cannot directly share in the Purdue Direct Settlement funds, even if other subdivisions in the state are participating and sharing in those Purdue Direct Settlement funds. Any subdivision that does not participate may also reduce the amount of money for programs to remediate the opioid crisis in its state. Please note, a subdivision will not necessarily directly receive Purdue Settlement funds by participating; decisions on how Purdue Settlement funds will be allocated within a state are subject to intrastate agreements or state statutes.

You are encouraged to discuss the terms and benefits of the Purdue Settlement with your counsel, your Attorney General's Office, and other contacts within your state. Many states are implementing and allocating funds for the Purdue Settlement the same as they did for the prior opioids settlements but states may choose to treat the Purdue Settlement differently.

Information and documents regarding the Purdue Settlement, including a complete copy of the Governmental Entity and Shareholder Direct Settlement Agreement, and how it is being implemented in your state and how funds will be allocated within your state can be found on the national settlement website at https://nationalopioidsettlement.com/purdue-sacklers-settlements/. This website will be supplemented as additional documents are created.

How to return signed forms:

There are three methods for returning the executed *Participation Form* and any supporting documentation to the Implementation Administrator.

(1) *Electronic Signature via DocuSign*: Executing the *Participation Form* electronically through DocuSign will return the signed form to the Implementation Administrator and associate your form with your subdivision's records. Electronic signature is the most efficient method for returning the *Participation Form*, allowing for more timely participation and the potential to meet higher settlement payment thresholds, and is therefore strongly encouraged.

(2) *Manual Signature returned via DocuSign*: DocuSign allows forms to be downloaded, signed manually, then uploaded to DocuSign and returned automatically to the Implementation Administrator. Please be sure to complete all fields. As with electronic signature, returning a manually signed *Participation Form* via DocuSign will associate your signed forms with your subdivision's records.

(3) *Manual Signature returned via electronic mail*: If your subdivision is unable to return an executed *Participation Form* using DocuSign, the signed *Participation Form* may be returned via electronic mail to opioidspart cipation@rubris.com.

Docusign Envelope ID: 92F84622-895A-4083-B7D6-FF7B80FB9CC5

Please include the name, state, and reference ID of your subdivision in the body of the email and use the subject line Settlement Participation Form - [Subdivision Name, Subdivision State] - [Reference ID].

Detailed instructions on how to sign and return the *Participation Form*, including changing the authorized signer, can be found at https://nationalopioidsettlement.com/purdue-sacklers-settlements/. You may also contact opioidsparticipation@jsbpos.com.

YOU MUST PARTICIPATE IN THE PURDUE DIRECT SETTLEMENT BY RETURNING YOUR PARTICIPATION FORM IN ORDER TO RECEIVE THE BENEFITS OF THE PURDUE SETTLEMENT.

Please note that this is NOT a solicitation or a request for subdivisions to submit votes on the Purdue bankruptcy plan. This settlement package only pertains to a decision to participate in the Purdue Direct Settlement. If you receive a package to vote on the plan you should follow the applicable instructions for voting. PLEASE NOTE THAT VOTING ON THE PLAN IS SEPARATE FROM PARTICIPATION IN THE PURDUE DIRECT SETTLEMENT.

The sign-on period for subdivisions ends on September 30, 2025.

If you have any questions about executing the *Participation Form*, please contact your counsel, the Implementation Administrator at opioidsparticipation@jsbpos.com, or any of the following contacts at the West Virginia Attorney General's Office:

Ann L. Haight
Deputy Attorney General
Phone: (304) 558-8986
Email: Ann.L.Haight@wvago.gov

Abby G. Cunningham
Assistant Attorney General
Phone: (304) 558-8986
Email: Abby.G.Cunningham@wvago.gov

Laurel K. Lackey
Assistant Attorney General
Phone: (304) 267-0239
Email: Laurel.K.Lackey@wvago.gov

Thank you,

Implementation Administrator for the Purdue Direct Settlement

Docusign Envelope ID: 92F84622-895A-4083-B7D6-FF7B80FB9CC5

The Implementation Administrator is retained to provide the settlement notice required by the Purdue Direct Settlement to manage the collection of the participation forms for it.

Docusign Envelope ID: 92F84622-E954-4083-B7D5-FF7B82FB9CC5

EXHIBIT K

Subdivision Participation and Release Form

Governmental Entity: Pocahontas County	State: WV
Authorized Signatory:	
Address 1:	
Address 2:	
City, State, Zip:	
Phone:	
Email:	

The governmental entity identified above ("*Governmental Entity*"), in order to obtain and in consideration for the benefits provided to the Governmental Entity pursuant to that certain Governmental Entity & Shareholder Direct Settlement Agreement accompanying this participation form (the "*Agreement*")[1], and acting through the undersigned authorized official, hereby elects to participate in the Agreement, grant the releases set forth below, and agrees as follows:

1. The Governmental Entity is aware of and has reviewed the Agreement, and agrees that by executing this Participation and Release Form, the Governmental Entity elects to participate in the Agreement and become a Participating Subdivision as provided therein.

2. The Governmental Entity shall promptly after the Effective Date, and prior to the filing of the Consent Judgment, dismiss with prejudice any Shareholder Released Claims and Released Claims that it has filed. With respect to any Shareholder Released Claims and Released Claims pending in *In re National Prescription Opiate Litigation*, MDL No. 2804, the Governmental Entity authorizes the Plaintiffs' Executive Committee to execute and file on behalf of the Governmental Entity a Stipulation of Dismissal with Prejudice substantially in the form found at https://nationalopioidsettlement.com.

3. The Governmental Entity agrees to the terms of the Agreement pertaining to Participating Subdivisions as defined therein.

4. By agreeing to the terms of the Agreement and becoming a Releasor, the Governmental Entity is entitled to the benefits provided therein, including, if applicable, monetary payments beginning following the Effective Date.

5. The Governmental Entity agrees to use any monies it receives through the Agreement solely for the purposes provided therein.

6. The Governmental Entity submits to the jurisdiction of the court in the Governmental Entity's state where the Consent Judgment is filed for purposes limited to that court's role as and to the extent provided in, and for resolving disputes to the extent provided in, the

[1] Capitalized terms used in this Exhibit K but not otherwise defined in this Exhibit K have the meanings given to them in the Agreement or, if not defined in the Agreement, the Master Settlement Agreement.

Docusign Envelope ID: 92F84622-895A-4083-87D6-FF7B80FB9CC5

Agreement. The Governmental Entity likewise agrees to arbitrate before the National Arbitration Panel as provided in, and for resolving disputes to the extent otherwise provided in, the Agreement.

7. The Governmental Entity has the right to enforce the Agreement as provided therein.

8. The Governmental Entity, as a Participating Subdivision, hereby becomes a Releasor for all purposes in the Agreement, including without limitation all provisions of Article 10 (Release), and along with all departments, agencies, divisions, boards, commissions, districts, instrumentalities of any kind and attorneys, and any person in his or her official capacity whether elected or appointed to serve any of the foregoing and any agency, person, or other entity claiming by or through any of the foregoing, and any other entity identified in the definition of Subdivision Releasor, to the maximum extent of its authority, for good and valuable consideration, the adequacy of which is hereby confirmed, the Shareholder Released Parties and Released Parties are, as of the Effective Date, hereby released and forever discharged by the Governmental Entity and its Subdivision Releasors from: any and all Causes of Action, including, without limitation, any Estate Cause of Action and any claims that the Governmental Entity or its Subdivision Releasors would have presently or in the future been legally entitled to assert in its own right (whether individually or collectively), notwithstanding section 1542 of the California Civil Code or any law of any jurisdiction that is similar, comparable or equivalent thereto (which shall conclusively be deemed waived), whether existing or hereinafter arising, in each case, (A) directly or indirectly based on, arising out of, or in any way relating to or concerning, in whole or in part, (i) the Debtors, as such Entities existed prior to or after the Petition Date, and their Affiliates, (ii) the Estates, (iii) the Chapter 11 Cases, or (iv) Covered Conduct and (B) as to which any conduct, omission or liability of any Debtor or any Estate is the legal cause or is otherwise a legally relevant factor (each such release, as it pertains to the Shareholder Released Parties, the "Shareholder Released Claims", and as it pertains to the Released Parties other than the Shareholder Released Parties, the "Released Claims"). For the avoidance of doubt and without limiting the foregoing: the Shareholder Released Claims and Released Claims include any Cause of Action that has been or may be asserted against any Shareholder Released Party or Released Party by the Governmental Entity or its Subdivision Releasors (whether or not such party has brought such action or proceeding) in any federal, state, or local action or proceeding (whether judicial, arbitral, or administrative) (A) directly or indirectly based on, arising out of, or in any way relating to or concerning, in whole or in part, (i) the Debtors, as such Entities existed prior to or after the Petition Date, and their Affiliates, (ii) the Estates, (iii) the Chapter 11 Cases, or (iv) Covered Conduct and (B) as to which any conduct, omission or liability of any Debtor or any Estate is the legal cause or is otherwise a legally relevant factor.

9. As a Releasor, the Governmental Entity hereby absolutely, unconditionally, and irrevocably covenants not to bring, file, or claim, or to cause, assist or permit to be brought, filed, or claimed, or to otherwise seek to establish liability for any Shareholder Released Claims or Released Claims against any Shareholder Released Party or Released Party in any forum whatsoever, subject in all respects to Section 9.02 of the Master Settlement Agreement. The releases provided for herein (including the term "Shareholder Released

DocuSign Envelope ID: 92F84622-895A-4083-B7D6-FF7B80FB9CC5

Claims" and "Released Claims") are intended by the Governmental Entity and its Subdivision Releasors to be broad and shall be interpreted so as to give the Shareholder Released Parties and Released Parties the broadest possible release of any liability relating in any way to Shareholder Released Claims and Released Claims and extend to the full extent of the power of the Governmental Entity to release claims. The Agreement shall be a complete bar to any Shareholder Released Claim and Released Claims.

10. To the maximum extent of the Governmental Entity's power, the Shareholder Released Parties and the Released Parties are, as of the Effective Date, hereby released and discharged from any and all Shareholder Released Claims and Released Claims of the Subdivision Releasors.

11. The Governmental Entity hereby takes on all rights and obligations of a Participating Subdivision as set forth in the Agreement.

12. In connection with the releases provided for in the Agreement, each Governmental Entity expressly waives, releases, and forever discharges any and all provisions, rights, and benefits conferred by any law of any state or territory of the United States or other jurisdiction, or principle of common law, which is similar, comparable, or equivalent to § 1542 of the California Civil Code, which reads:

> **General Release; extent.** A general release does not extend to claims that the creditor or releasing party does not know or suspect to exist in his or her favor at the time of executing the release that, if known by him or her, would have materially affected his or her settlement with the debtor or released party.

A Releasor may hereafter discover facts other than or different from those which it knows, believes, or assumes to be true with respect to the Shareholder Released Claims or such other Claims released pursuant to this release, but each Governmental Entity hereby expressly waives and fully, finally, and forever settles, releases and discharges, upon the Effective Date, any and all Shareholder Released Claims or such other Claims released pursuant to this release that may exist as of such date but which Releasors do not know or suspect to exist, whether through ignorance, oversight, error, negligence or through no fault whatsoever, and which, if known, would materially affect the Governmental Entities' decision to participate in the Agreement.

13. Nothing herein is intended to modify in any way the terms of the Agreement, to which Governmental Entity hereby agrees. To the extent any portion of this Participation and Release Form not relating to the release of, or bar against, liability is interpreted differently from the Agreement in any respect, the Agreement controls.

14. Notwithstanding anything to the contrary herein or in the Agreement, (x) nothing herein shall (A) release any Excluded Claims or (B) be construed to impair in any way the rights and obligations of any Person under the Agreement, and (y) the Releases set forth herein shall be subject to being deemed void to the extent set forth in Section 9.02 of the Master Settlement Agreement.



Docusign Envelope ID: 92F84622-895A-4083-B7D6-FF7B80FB9CC5

I have all necessary power and authorization to execute this Participation and Release Form on behalf of the Governmental Entity.

Signature

Name John Rebinski

Title: President

Date: August 5, 2025

IN RE: MEMORANDUM OF UNDERSTANDING BETWEEN POCAHONTAS COUNTY COMMISSION AND REMS (RAPID EXTRACTION MODULE SUPPORT)

A motion was made by Commissioner Walker to approve the Memorandum of Understanding between Pocahontas County Commission and REMS (Rapid Extraction Module Support), and noting no objections, motion carried.

Memorandum of Understanding (MOU)

This Memorandum of Understanding (MOU) is entered into on this 5 day of August, 2025, by and between the Pocahontas County Commission ("the County") and the Pocahontas County Tourism Commission, a 501(c)(6) nonprofit organization ("PCTC") dba the Snowshoe Highlands Area Recreation Collaborative ("SHARC") collectively referred to as "the Parties."

1. Purpose

The purpose of this MOU is to establish a cooperative relationship between the Parties to support the development and operation of a Type 1 Rapid Extraction Module Support (REMS) Team based in Pocahontas County, West Virginia. The REMS Team will:

- Provide technical rescue evacuation services in remote environments
- Serve as a deployable national asset for 4–6 assignments annually
- Support local, regional, and state emergency operations when needed
- Advance outdoor recreation safety and workforce resilience

This REMS Team will include and support the recruitment, training, and retention of volunteer firefighters with wildland and technical rescue capabilities in compliance with FEMA SAFER R&R eligibility criteria.

2. Governance and Oversight

- The REMS Team shall operate under the guidance of the Pocahontas County Commission and in coordination with the Pocahontas County Office of Emergency Management (OEM) for integration into local response protocols.
- The Pocahontas County Tourism Commission (PCTC) will serve as the fiscal agent and program sponsor, providing financial management and administrative support.

3. Fiscal Agent Responsibilities (PCTC)

PCTC shall:

- Establish and maintain a restricted fund for REMS operations
- Administer all grants, reimbursements, contracts, and procurement activities
- Manage payroll, per diem, and tax compliance for deployed personnel
- Coordinate quarterly financial and performance reporting to the County Commission

- Ensure all fiscal activities remain compliant with applicable IRS and state nonprofit regulations

3.1 Justification for Fiscal Sponsorship by PCTC

PCTC is uniquely positioned to act as fiscal agent due to its mission-driven commitment to enhancing the economic vitality, safety, and sustainability of Pocahontas County's outdoor recreation economy. Specifically:

- **Deep Understanding of Visitor Demographics:** PCTC maintains data and insight on visitation trends, seasonal hazards, and recreational hotspots, all of which directly inform risk mitigation strategies that the REMS Team will support
- **Operational Knowledge of the Backcountry:** Many REMS deployments will occur in or near rugged backcountry terrain frequented by visitors—areas that PCTC actively promotes, maps, and manages in coordination with land agencies
- **Alignment with Outdoor Infrastructure Goals:** As PCTC supports trail development, conservation, and stewardship programming, hosting a REMS Team aligns directly with the long-term goal of making Pocahontas County a safer and more resilient destination
- **Workforce Development and Economic Impact:** Hosting a REMS team enables the creation of high-skill, seasonal and full-time jobs that contribute to the tourism-based economy, while building local capacity for national deployments that bring revenue and recognition to the county

Through this fiscal sponsorship, PCTC enhances both its organizational goals and the County's public safety strategy in a mutually beneficial model.

4. Operational Responsibilities (Team Leadership)

The REMS Team Leadership shall:

- Maintain a certified and deployable Type 1 REMS roster
- Coordinate all training, readiness, gear maintenance, and mobilization logistics
- Ensure compliance with national and local standards
- Handle assigned local emergency activation under County Incident Command

5. Deployment and Mobilization

- The REMS crew will consist of 6–10 qualified personnel
- Deployment priority: Federal fire assignments → State requests → Local emergencies

- Annual forecast includes 4–6 national deployments

6. Budget and Revenue Overview

Annual Revenue and Expense Projections

Category	Estimate
Federal Deployment Reimbursements	$432,000
State/Local Contracts	$25,000
Training Programs & Courses	$15,000
Sponsorships & Grants	$55,000
Total Revenue	$527,000
Crew Wages (6 FTEs at $40–50K/year)	$255,000
Equipment, Gear & Replacement	$75,000
Training & Certifications	$20,000
Mobilization & Travel	$35,000
Insurance, Admin, PCTC Overhead	$30,000
Total Expenses	$415,000

Estimated Annual Surplus

| Net Annual Profit | $112,000

This surplus represents flexible program income that can be reinvested into:

- Program expansion and response capacity
- Community safety and outreach initiatives
- Additional training or equipment purchases
- Matching funds for federal or state grants

Fiscal and Public Benefit Alignment

This financial model demonstrates that a high-capacity, deployable REMS crew based in Pocahontas County can:

- Sustain its core operations through federal fire and rescue deployments
- Provide a reliable revenue stream for the county and PCTC
- Contribute directly to workforce development, regional resilience, and public safety

This structure provides a replicable model for rural counties seeking to combine tourism, fire resilience, and economic development under a shared operational umbrella

7. Public Benefit Alignment

This REMS initiative supports

- Enhanced recreation safety and tourism infrastructure
- Development of a rural fire and rescue workforce
- Revenue generation through national service
- Long-term resilience planning in a high-visitation region

8. Term and Termination

This MOU shall be in effect for a period of **three (3) years**, with automatic one-year renewals unless terminated by either party with sixty (60) days written notice.

9. Signatures

Pocahontas County Commission	Pocahontas County Tourism Commission
Name [signature] Title President Date August 5, 2025	Name CHARLES EVANS Title BACKCOUNTRY COORDINATOR/EMO Date 5/8/2025

IN RE: COUNTY COMMISSION'S AUTHORITY OVER APPOINTED BOARDS AND DEPARTMENTS DIRECTLY UNDER THEIR SUPERVISION

No action was taken on this matter.

IN RE: APPROVAL OF MOU FOR 911 TOWER/BEARD HEIGHTS TOWER WITH POCAHONTAS COUNTY BOARD OF EDUCATION

A motion was made by Commissioner Walker to approve the MOU for the Beard Heights Tower with Pocahontas County Board of Education, and noting no objections, motion carried.

THIS LEASE AND EASEMENT AGREEMENT, made and entered this 5th day of August, 2025, by and between the **POCAHONTAS COUNTY COMMISSION**, party of the first part, and **THE POCAHONTAS COUNTY BOARD OF EDUCATION**, party of the second part.

WITNESSETH:

That for and in consideration of the mutual covenants and conditions hereinafter set forth, the parties do hereby mutually agree as follows:

1. The party of the second part is the owner of a certain 31.97 acre tract of real estate, more particularly identified as Parcel No. 1, Tax Map No. 15D, Town of Marlinton, Pocahontas County, West Virginia, and described in that certain deed of record in the Office of the Clerk of the County Commission in Deed Book 188, at page 579, to which reference is hereby given for a more particular description;
2. The party of the first part desires to construct, and the party of the second part desires to permit construction of, a certain tower to be utilized by the party of the first part for radio transmission and emergency services purposes;
3. That said tower will be located on a portion of the property described as follows:

A tract of land situate behind (south of) Marlinton Middle School, approximately 930 feet south of US Route 219, on the waters of the Greenbrier River in Marlinton Corporation District of Pocahontas County, West Virginia, and being more particularly described as follows:

BEGINNING at a ¾" x 30" galvanized rebar with a 2 ½" aluminum cap set (rebar set, hereafter), in a line of Pocahontas Memorial Hospital and The Pocahontas County Board of Education, from which a 1" iron pipe found, corner to said Hospital, bears S 46°08'30" E at 192.61 feet, thence through said Board of Education tract with three new division lines

S 43°51'30" W, 100 feet to a rebar set, thence

N 46°08'30" W, 100 feet to a rebar set, from which GPS Control Point No. 1000 bears N 74°02'50" W at 86.36', thence

N 43°51'30" E, 100 feet to a rebar set in line of said Hospital, thence with said Hospital for a line

S 46°08'30" E at 96.32' passing the centerline of a 20-foot wide right-of-way along an existing skid road surveyed concurrently with this survey, in all 100 feet to the Point of Beginning containing 0.23 acres (10,000 sq. feet), and being part of the same 31.97 acre tract as conveyed to

The Pocahontas County Board of Education from Glenna B. Hayes, widow, by deed dated July 23, 1986, and recorded in the Office of the Clerk of the County Commission of Pocahontas County, West Virginia, in Deed Book 188, at page 579.

As surveyed on the grid north meridian by Allegheny Surveys, Inc., of Birch River, West Virginia, from December 2024 through January 2025, and shown on a plat entitled "Plat of Partition Survey for Pocahontas County E-911" made of record contemporaneously herewith and made a part of this description:

4. The party of the second part does hereby grant unto the party of the first part a non-exclusive perpetual easement to the portion of the property so described and depicted on the referenced plat, to maintain and operate the transmission tower located thereon to provide radio and emergency services by the party of the first part;

5. The party of the second part also grants unto the party of the first part such easements as are necessary for ingress, egress and regress on, over and across the property of the party of the second part to construct and maintain the tower site;

6. The party of the first part agrees that it shall maintain the premises in a clean and safe manner and shall not permit debris or trash to accumulate thereon, nor allow any unsafe conditions to exist thereon.

WITNESS the following signatures and seals:

POCAHONTAS COUNTY COMMISSION

By: _____
John Rebinski, President

THE POCAHONTAS COUNTY
BOARD OF EDUCATION

By: _____
Emery Grimes, President

STATE OF WEST VIRIGNA,
COUNTY OF POCAHONTAS, to wit:

I, Lisa G. Workman, a Notary Public in and for the State aforesaid, do hereby certify that JOHN REBINSKI, as PRESIDENT of the POCAHONTAS COUNTY COMMISSION, whose name is signed to the foregoing LEASE AND EASEMENT AGREEMENT, bearing date the 5th day of August, 2025, has this day acknowledged the same before me in said County and State.

Given under my hand and Notarial Seal, this the 5th day of August, 2025.

_____
NOTARY PUBLIC

My Commission Expires:

January 8, 2030



STATE OF WEST VIRIGNA,
COUNTY OF POCAHONTAS, to wit.

I, _____, a Notary Public in and for the State aforesaid, do hereby certify that EMERY GRIMES, as PRESIDENT of THE POCAHONTAS COUNTY BOARD OF EDUCATION, whose name is signed to the foregoing LEASE AND EASEMENT AGREEMENT, bearing date the _____ day of _____, 2025, has this day acknowledged the same before me in said County and State.

Given under my hand and Notarial Seal, this the _____ day of _____, 2025.

_____
NOTARY PUBLIC

My Commission Expires:

_____

LEASE AND AGREEMENT PREPARED BY:

LAURA M. KERSHNER
POCAHONTAS COUNTY PROSECUTING ATTORNEY
900 TENTH AVENUE, SUITE B
MARLINTON, WV 24954

IN RE: RESOLUTION #11 FOR THE PMH/HVAC PROJECT

Donna Ward with Region 4 met with the Commission to approve Resolution #11 for the PMH/HVAC Project. A motion was made by Commissioner Walker to approve Resolution #11 for the PMH/HVAC Project and noting no objections, motion carried.

Pocahontas County Commission

JOHN REBINSKI
President
JAMIE WALKER
Commissioner
THANE RYDER
Commissioner

8/05/2025

Summer Fleck
1900 Kanawha Boulevard, East
State Capitol Complex
Building 3, Suite 700
Charleston, West Virginia 25305

RE: **Pocahontas County PMH HVAC/Roof Replacement – Project #CV-CDBG0013**
Request for Payment #11

Dear Ms. Fleck:

In accordance with the drawdown procedures established by the State, this letter of transmittal contains a progress report on the above- referenced grant to support the attached Request for Payment.

Progress Report – Funded Activities

HVAC units installed, tested and are running.
The punch list walk through has been done with items from list being addressed.
Project paused awaiting product ordered from Budget Amendment no. 2.

The CDBG-CV amount requested is: $ 167,006.10.

Please note that this request includes only a CDBG draw. If you have any questions or if any additional information is needed, please contact Donna Ward of Region 4 PDC at (304) 872-4970, extension 305.

Sincerely,

John Rebinski
President

Enclosures

900 Tenth Avenue * Marlinton, WV 24954 * (304)799-6063

Pocahontas County Commission

JOHN REBINSKI
President
JAMIE WALKER
Commissioner
THANE RYDER
Commissioner

P-PCC-002
Resolution #11
August 5, 2025

RESOLUTION OF THE POCAHONTAS COUNTY COMMISSION APPROVING INVOICES RELATING TO DESIGN, CONSTRUCTION AND OTHER SERVICES FOR THE POCAONTAS MEMORIAL HOSPITAL HVAC/ROOF REPLACEMENT PROJECT AND AUTHORIZING PAYMENT THEREOF.

WHEREAS, Pocahontas County Commission has reviewed the invoices attached hereto and incorporated herein by reference relating to the design and/or construction of the Pocahontas Memorial Hospital HVAC/Roof Replacement Project funded by a CDBG-CV and finds as follows.

a) That none of the items for which the payment is proposed to be made has formed the basis for any disbursement heretofore made
b) That each item for which the payment is proposed to be paid is or was necessary in connection with the project and constitutes a cost of the project
c) That each of such costs has been otherwise properly incurred.
d) That payment for each of the items proposed is due and owing as the date hereof

WHEREAS the Pocahontas County Commission will deposit the project funds into the Project Account and will apply said proceeds to the payment of eligible invoices received by the Pocahontas County Commission. The Pocahontas County Commission will provide the funding agency with copies of said invoices
NOW, THEREFORE, BE IT RESOLVED by the Pocahontas County Commission as follows. There is hereby authorized and directed the payment of the attached invoices as follows

VENDOR	Total	CDBG-CV
Pennington Plumbing & Heating Pay Application #6 and #7 Construction Services	**$ 163,913.58**	**$ 163,913.58**
Becker Morgan Group Invoice #2019130.06-25 Technical Services	**$ 395.30**	**$ 395.30**
Region 4 PDC Invoices 5312024, 6302024, 7312024 Project Administration	**$ 2,697.22**	**$ 2,697.22**
Total	**$ 167,006.10**	**$ 167,006.10**

ADOPTED BY THE POCAHONTAS COUNTY COMMISSION at the meeting held on the 5th day of August 2025

Pocahontas County Commission

By _____
John Rebinsky, President

Community Development Block Grant -Small Cities Block Grant Program
REQUEST FOR PAYMENT

TO: West Virginia Development Office
Building 3, Room 700
1900 Kanawha Boulevard, East
Charleston WV 25305-0311
304-558-2234

FROM: Pocahontas County Commission
900 10th Ave.
Marlinton, WV 24954

Project Name	Pocahontas Memorial Hospital HVAC/Roof Replacement	Project #	CV-CDBG0013
Invoice #	222644-11	% of Funds Expensed	85.0%
Time Period Covered by this Request	12/23/2024	TO	7/20/2025

COST CATEGORIES	APPROVED BUDGET AMOUNT	AMOUNT REQUESTED TO DATE	AMOUNT REQUESTED THIS DRAW	TOTAL AMOUNT REQUESTED	AMOUNT DISBURSED TO DATE	BALANCE
Administration	$25,000.00	$ 16,287.74	$ 2,697.22	$ 18,984.96		$ 6,015.04
Accounting		$ -	$ -	$ -	$ -	$ -
Arch/Engineering	$150,000.00	$ 145,524.01	$ 395.30	$ 145,919.31		$ 4,080.69
Land Acquisition	$ -	$ -	$ -	$ -	$ -	$ -
Construction	$1,398,764.00	$ 1,020,774.42	$ 163,913.58	$ 1,184,688.00	$ -	$ 214,076.00
Permits/Fees	$ 3,000.00	$ 2,849.88		$ 2,849.88	$ -	$ 150.12
Legal		$ -	$ -	$ -	$ -	$ -
Planning		$ -	$ -	$ -	$ -	$ -
SUB-TOTAL:	$ 1,576,764.00	$ 1,185,436.05	$ 167,006.10	$ 1,352,442.15	$ -	$ 224,321.85
Less Income						
TOTAL:	$ 1,576,764.00	$ 1,185,436.05	$ 167,006.10	$ 1,352,442.15	$ -	$ 224,321.85

I certify costs claimed by this report are correct and just and based upon actual requirements, that work and services are in accordance with the approved project agreement, and that work and services are satisfactory and consistent with the amount claimed. Supporting documents are attached to verify costs claimed and are available locally for audit and inspection. City, county, or other direct recipients of funds are not involved in any court litigation or lawsuit involving any applicable laws contained in the grant contract.

Chief Elected Official Signature — Date: 8/05/2025

John Rebinski, Pocahontas County Commission President
Printed Name of Chief Elected Offical

Copies of Invoices Required
Invoice Summary Forms Required

v12-4-2020

ATTACHMENT 3-4

IN RE: APPROVAL OF ENERGY EFFICIENCY & CONSERVATION BLOCK GRANT

A motion was made by Commission Ryder to approve the Energy Efficiency and Conservation Block Grant, and noting no objections, motion carried.

IN RE: EMS AUTHORITY – FURTHER DISCUSSION ON EMS DIRECTOR

Brandon Jones with the EMS Authority met with the Commission to present the EMS Authority's recommendation for the EMS Director Position. The EMS Authority's recommendation was Christoper Lusk. A motion was made by Commissioner Walker to approve Christopher Lusk as EMS Director effective September 2, 2025, with a starting salary of $65,000.00 per year and full benefits. The County Commission will pay $50,000.00, and the additional $15,000.00 will come from the EMS Authority. This will be a two-year pilot project that will be reevaluated to see how progress goes; and noting no objections, motion carried.

IN RE: APPROVAL TO USE OPIOID FUNDS FOR POCAHONTAS AMBULANCE EQUIPEMNT

A motion was made by Commissioner Walker to approve the use of Opioid funds for Pocahontas Ambulance Equipment, and noting no objections, motion carried.

IN RE: CONTRIBUTION/FUNDING REQUESTS VARIOUS INDIVIDUALS, GROUPS AND ORGANIZATIONS:

a. **ANGIE PASE - TUCKER COMMUNITY FOUNDATION, RUN FOR IT 2025**
b. **TIM WALKER – BRYANS BATTERY, DROOP BATTLEFIELD REENACTMENT**

Angie Pase representing the Tucker Community Foundation, 2025 Run For It. met with the Commission to request a $2,500.00 contribution. A motion was made by Commissioner Ryder to approve a $2,500.00 contribution for Tucker Community Foundation, Run For It 2025, and noting no objections motion carried.

Tim Walker representing Bryans Battery, Droop Battlefield Reenactment met with the Commission to request a $1,500.00 contribution. Commissioner Rebinski encourage Mr. Walker to change his request amount to $2,500.00. A motion was made by Commissioner Ryder to approve the $2,500.00 contribution to Bryans Battery, Droop Battlefield Reenactment, and noting no objections, motion carried.

IN RE: INVOICES

POCAHONTAS COUNTY COMMISSION

John Rebinski, President
Jamie Walker, Commissioner
Thane Ryder, Commissioner
Melissa L. Bennett, Clerk

900-C TENTH AVENUE
MARLINTON, WV 24954
(304)799-6063 or 799-4549

Checks Written against Funds
07/15/2025 through 08/04/2025

The following check numbers have been written against the following accounts

General County Fund
65820 through 65876 Pendleton Community Bank

Coal Severance Fund
None Pendleton Community Bank

General School Fund
None Pendleton Community Bank

Magistrate Court Fund
1002 through 1003 Pendleton Community Bank

911 Fund
1702 through 1703 Pendleton Community Bank

Home Detention Fund
None Pendleton Community Bank

Drama, Fairs, and Festivals Fund
None Pendleton Community Bank

County Financial Stabilization Fund
None Pendleton Community Bank

Drug Court Fund
None Pendleton Community Bank

Bricks and Mortar Fund
None Pendleton Community Bank

Employee Health Benefit Fund
1000 through 1002 VOID Pendleton Community Bank

Day Report Center/Community Corrections Fund
None Pendleton Community Bank

Teen Court Fund
None Pendleton Community Bank

Coal Bed Methane Fund
None Pendleton Community Bank

Animal Shelter Fund
None Pendleton Community Bank

Broad Band Grant Fund
None Pendleton Community Bank

Broad Band Project Grant Fund
None Pendleton Community Bank

ARP Fund
None Pendleton Community Bank

LATCF Fund
1027 Pendleton Community Bank

PMH/HVAC Roof Fund
1017 through 1019 Pendleton Community Bank

EMS Ambulance Fund
1101 through 1102 Pendleton Community Bank

Pocahontas Community Campground Fund
None Pendleton Community Bank

Howes Tannery
None Pendelton Community Bank

LEPC Fund
None Pendleton Community Bank

EMS Salary Enhancement
None Pendleton Community Bank

Hotel Occupancy Fund
None Pendleton Community Bank

BOE Demolition Grant
1008 Pendelton Community Bank

Tannery EPA Clean Up
None Pendelton Community Bank

ORDERED THIS MEETING BE ADJOURNED, SINE DIE.

PRESIDENT POCAHONTAS COUNTY COMMISSION